Sibley School of Mechanical and Aerospace Engineering

MAE 3240 Heat Transfer

Spring 2026

Problem Set #2

Posted: Monday, Feb 2 **Due: Tuesday, Feb 10, 11:59 pm**

---

1. (40 pt) Consider an electric water heater operated under a steady state. This water heater is a cylinder with radius $R = 0.5$ m and height $H = 1$ m. When the water heater is fully filled, the water temperature inside can be maintained at 50 °C. The wall of the water heater is thin enough and of high thermal conductivity, so we can assume that the exterior wall temperature of the water heater T_s is also 50 °C at the steady state. The water heater is placed in an environment with ambient temperature of $T_\infty = 20$ °C and heat transfer coefficient of $h = 15$ W/(m^2·K). The bottom of the water heater is well thermally insulated. Thermal radiation is negligible in this problem.

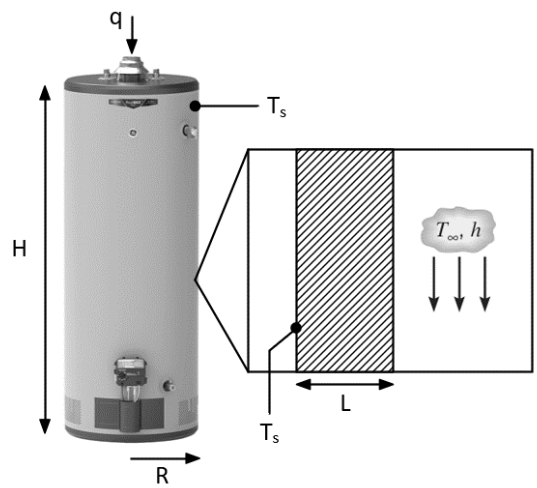

   (a) Calculate the total electrical heating power q needed to maintain a constant water temperature at 50 °C.

   (b) To reduce the heat loss from the water heater, we now attach a $L = 2$ cm thick thermal insulation foam to the exterior wall of the water heater, including both side wall and top wall (zoom-in illustration). Thermal conductivity k of the insulation foam is 0.1 W/(m·K). Since the thickness of the insulation foam is much smaller than the radius of the water heater, we can assume 1D heat conduction across the insulation foam. To maintain a constant water temperature at 50 °C, now how much total electrical heating power q is needed?

   (c) Compare the results obtained from (a) and (b), discuss the role of thermal insulation in the energy saving of water heater.

2. (40 pt) A thin film heater is sandwiched by a thermally insulating wall and a L = 10 cm thick plastic layer with a thermal conductivity of k = 1 W/(m·K). The exterior surface of the plastic layer is immersed in a coolant with temperature T_∞ = 20 °C and heat transfer coefficient h = 100 W/(m^2·K). The system is at a steady state. A 1D coodinate system is shown in the right figure. Assume the heater is infinitely thin and neglect thermal radiation.

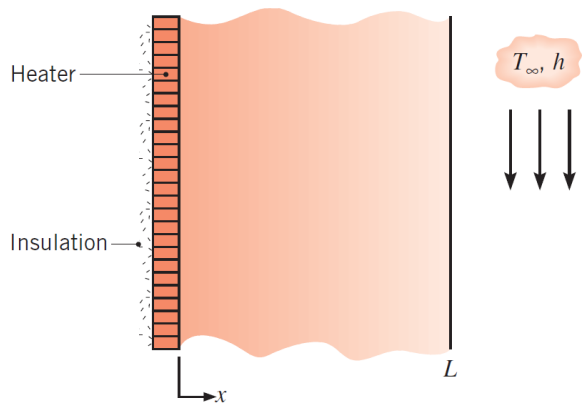

(a) When the thin film heater supplies a heat flux of q'' = 1000 W/m^2, calculate the temperature of the interior surface (x = 0) and the exterior surface (x = L) of the plastic layer.

(b) To avoid overheating, the temperature of the heater cannot exceed 200 °C. Calculate the maximum heat flux that can be provided by the thin film heater without the concern of overheating.

(c) Discuss three strategies that enable the thin film heater to be operated under even higher heat flux without exceeding 200 °C.

3. (20 pt) Laser based additive manufacturing is an emerging technique to create complex 3D metal structures with high spatial resolution. During the manufacturing process, a high-power laser beam is focused on a pool of metal powders. By scanning the focused laser beam, metal powders under the irradiation can absorb the laser energy, melt, and re-solidify, thereby creating dense solid metal with desirable structures. The right figure shows a representative cross-section temperature profile (isotherm) of a metal substrate under focused laser heating.

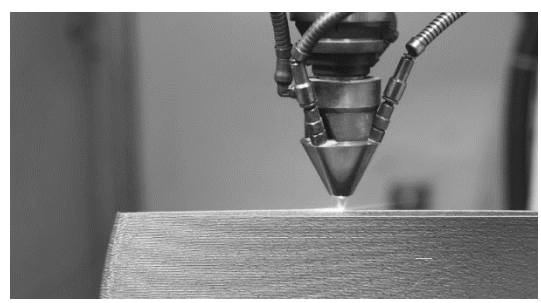

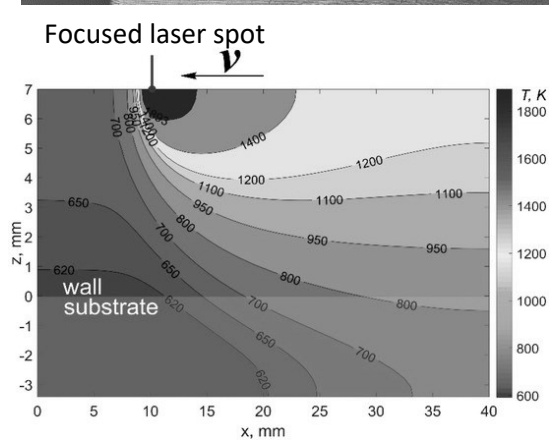

(a) Consider 2D heat transfer within the x-z plane, please schematically draw the heat flux vectors based on the given temperature profile in the right figure.

(b) Based on the temperature profile, please briefly explain which side the laser spot (left or right) has larger heat flux.